SHEAR SK1.20-13.RS.WS
2858289

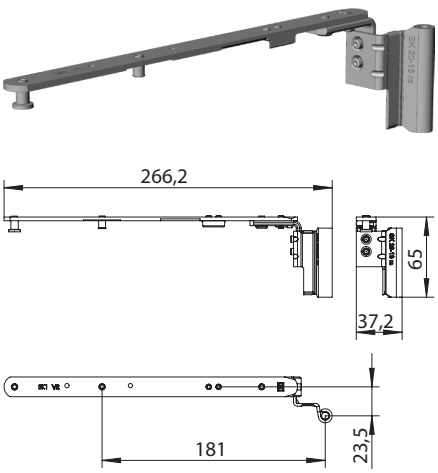

Specifikation	
Type of component	Shear
	aluminium, PVC
	13 mm
Airgap	12 mm
Sash overlap	20 mm
Mounting side	DIN right
visibility	surface-mounted
Opening type / switch sequence	Turn-tilt, Closed-Turn-Parallel
	op.
Colour	silver
surface	galvanised
Colour hinge side	white (similar to RAL 9016)
Surface hinge side	powdered
Hinge side design	activPilot Concept K
sash weight	130 kg
Turn Restriction	yes
forced control	no
Shear size	1
	140 mm
Opening angle	180 °
Packaging	Reusable

Note

For the intended use, please take into account the information from the fitting lists, mounting instructions and application diagrams.All rights and modificactions are reserved.